Lesson 3 Light the led modules

Table

1.What do you need to prepare 2

2.Knowledge and principle 3

3.Wiring Circle 3

4.Upload the code and test 5

5.Any questions and suggestions are welcome 7

1.What do you need to prepare

Components	Quantity	Picture
A to B USB cable	1	
Green LED module	1	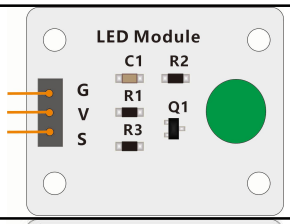
Red LED module	1	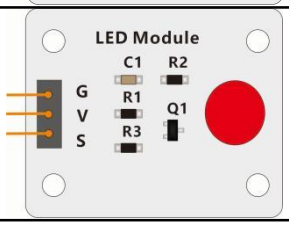
3Pin Female to female dupont wire	2	
Arduino UNO R3	1	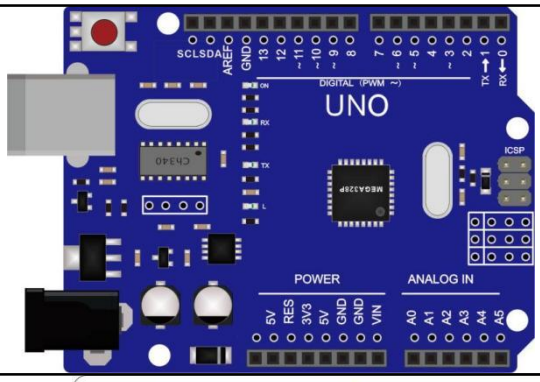
Expansion board for Arduino UNO	1	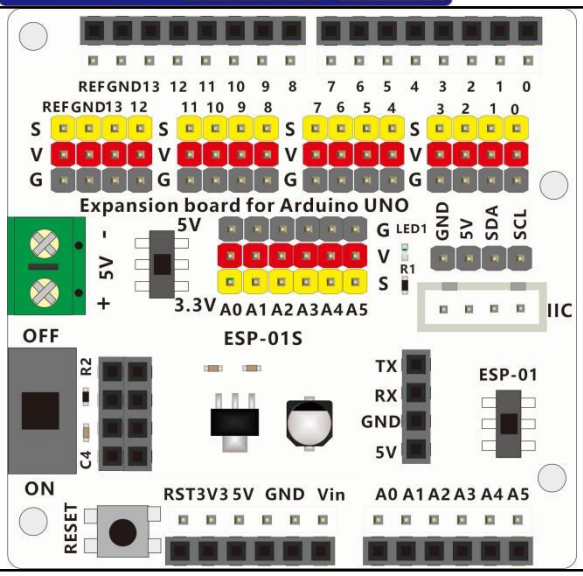

2.Knowledge and principle

An LED is a type of diode. All diodes only work if current is flowing in the correct direction and have two Poles. An LED will only work (light up) if the longer pin (+) of LED is connected to the positive output from a power source and the shorter pin is connected to the negative (-). Negative output is also referred to as Ground (GND). This type of component is known as “Polar” (think One-Way Street).

All common 2 lead diodes are the same in this respect. Diodes work only if the voltage of its positive electrode is higher than its negative electrode and there is a narrow range of operating voltage for most all common diodes of 1.9 and 3.4V. If you use much more than 3.3V the LED will be damaged and burn out.

LED	Voltage	Maximum Current	Recommended current
Red	1.9~2.2V	20mA	10mA
Green	2.9~3.4V	10mA	5mA
Blue	2.9~3.4V	10mA	5mA
Volt ampere characteristics conform to diode			

The LED module schematic diagram as below:

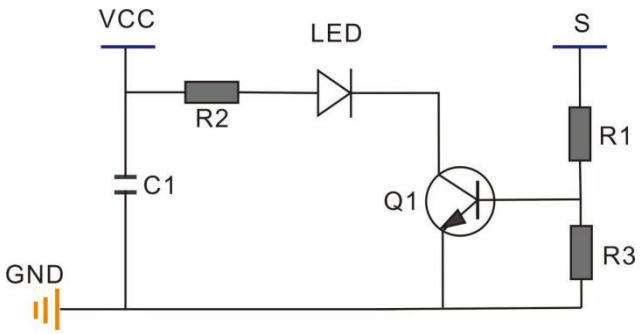

Q1 is a NPN type triode. When a high level signal input to the S (signal) pin, Q1 is switched on and the LED is lit. When the NPN type triode is used in the switching state, most of the emitter is grounded, the collector is connected to a high level, and the base is connected to the control signal. The key point is the voltage between the b pole (base) and the e stage (emitter), for NPN triode, as long as the b pole voltage is higher than 0.7V above the e stage, the triode can be smoothly switched on between the e stage and the c stage.

3.Wiring Circle

Insert the Arduino UNO expansion board onto the Arduino UNO R3 board, paying attention to the assembly direction.As shown in the following figure:

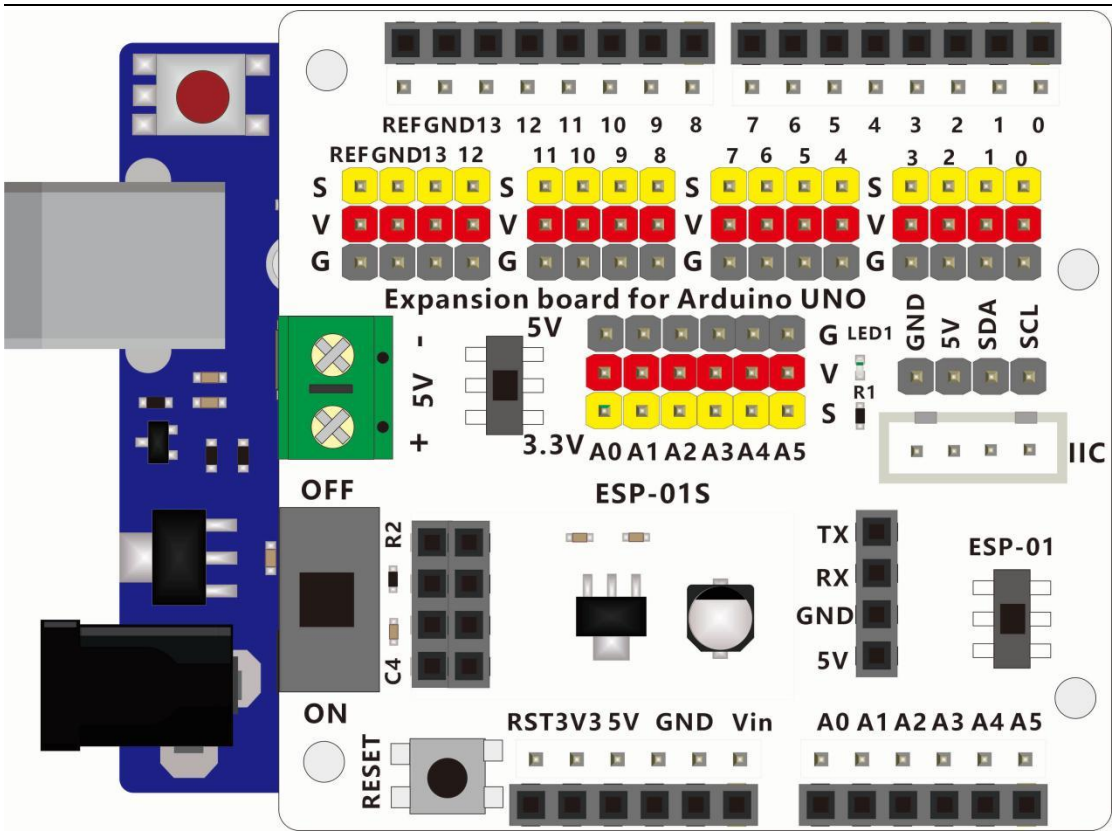

Turn the power switch on the expansion board to ON side and the 5V/3.3V switch to 5V side.

Connect the LED module to the Arduino UNO Expansion board using male to male DuPont wires. Connect the signal pin of the Red LED module to D11 on the expansion board and the signal pin of the Green LED module to D12 on the expansion board. Please refer to the following table for specific connection methods:

Connect the LED modules to the Expansion board for Arduino UNO	
Red LED module	Expansion board for Arduino UNO
S	D10
V	V
G	G
Green LED module	Expansion board for Arduino UNO
S	D12
V	V
G	G

The hardware connection diagram is as follows:

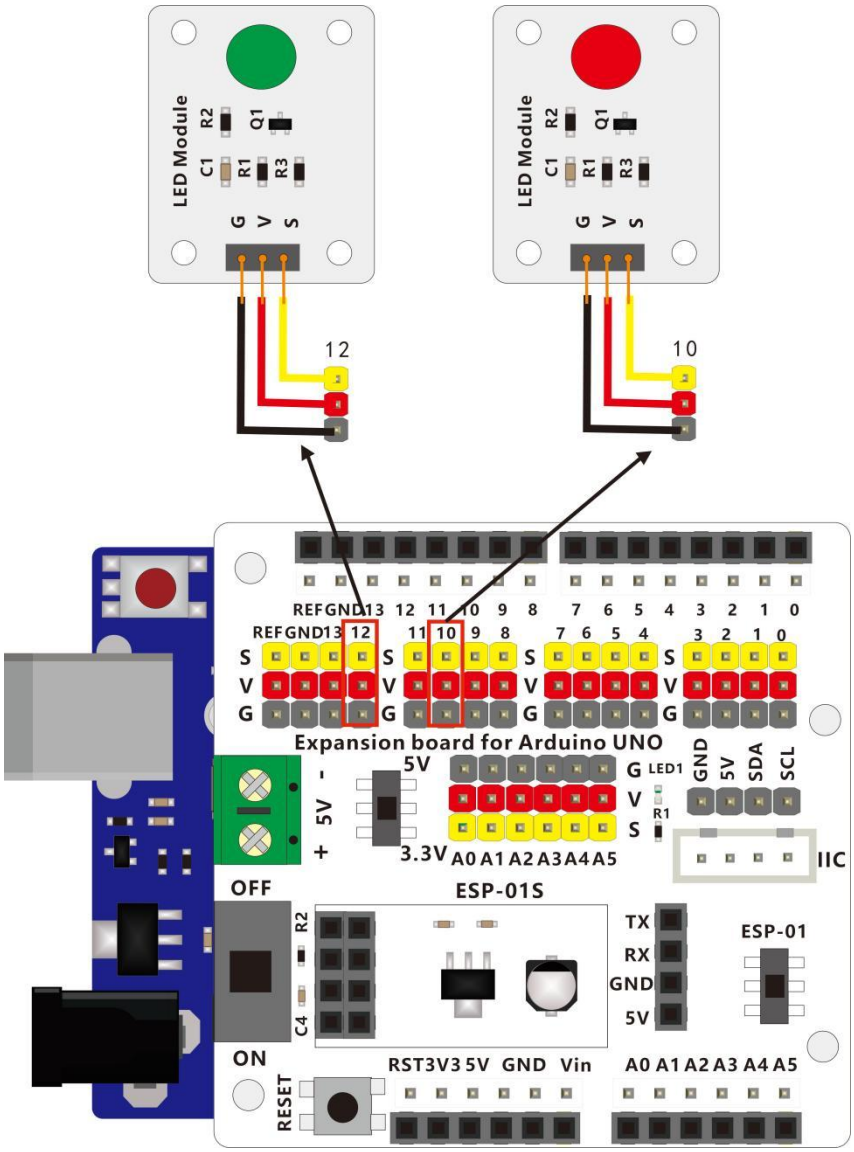

4.Upload the code and test

Connect the computer and UNO board using an A to B USB cable.
The code used in this lesson is placed in the folder:
E:\CKK0021-main\Tutorial\sketches
Double-click the Arduino IDE shortcut on the desktop to open it.

1_1_light_led

Click “File”---“open”

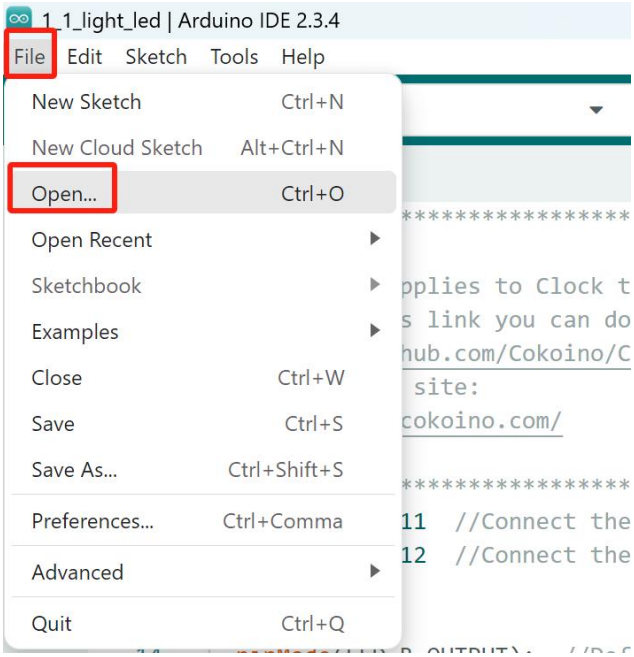

Select the code named 1_1_light_led in the folder:
E:\CKK0021-main\Tutorial\sketches\1_1_light_led
Click“open”, Open the program interface as follows

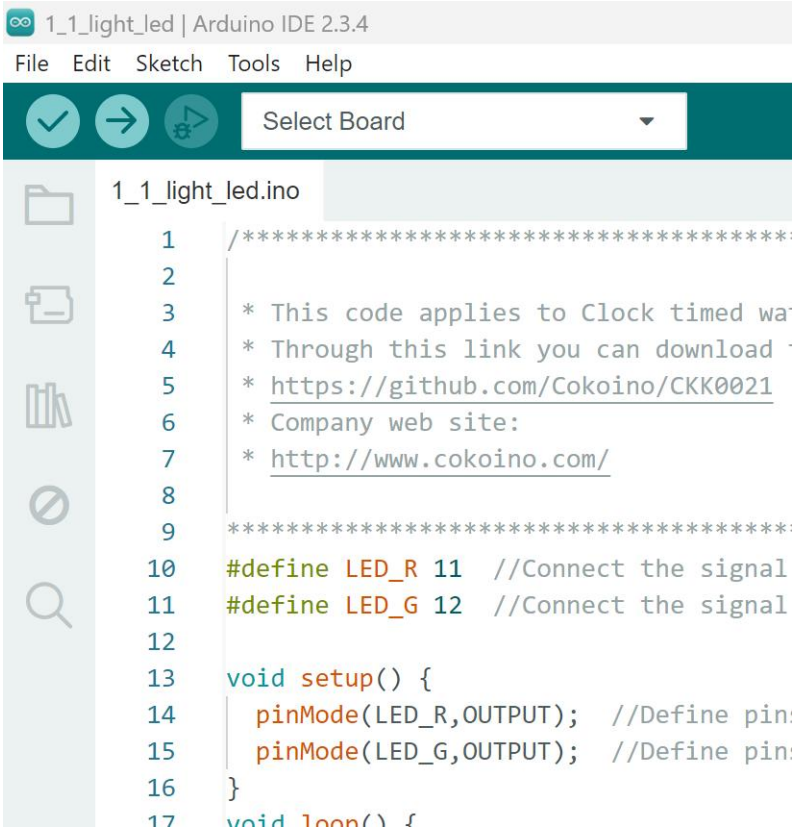

Click the comple button, "Done compiling" appears after the code compiling successfully.

Click the upload button , "Done uploading" appears after the code uploading successfully.

After the code is uploaded successfully,You can see that the red and green led module turn on and off the light in one second cycle.

5.Any questions and suggestions are welcome

THANK YOU for participating in this Lesson 1 experience!

If you find any errors, omissions or you have suggestions and/or questions about this lesson, please feel free to contact us:

cokoino@outlook.com

We will make every effort to make changes and correct errors as soon as feasibly possible and publish a revised version.

If you want to learn more about Arduino, Raspberry Pi, Smart Cars, Robotics and other interesting products in science and technology, please continue to visit our Amazon Store by search for "**LK COKOINO**" on Amazon. Or visit our official website: **www.cokoino.com**

We will continue to launch fun, cost-effective, innovative and exciting products.

Thank you again for choosing Cokoino products.

LK COKOINO